CRISTINA

Spare Parts List

CRIIT61972MQ | Italy Series | Polished Black Chrome | Polished Marquinia

How to request a replacement

Provide B&M with the complete SKU CRIIT61972MQ, purchase details and photographs of the installed product and required component. Match the exact model and production revision before ordering.

Manufacturer reference	Selection
CRIIT162	Finish or material dependent
CRIIT622	Finish or material dependent
CRIMV12664P	Finish or material dependent
CRIMV17038P00	Manufacturer reference
CRIMV24081P	Finish or material dependent
CRIPD016	Finish or material dependent
CRIPD051	Finish or material dependent
CRIPD114	Finish or material dependent
CRIPD560	Finish or material dependent
CRIPI19819P	Finish or material dependent

Finish and revision notes

Finish/material-dependent families require the correct suffix. Select 72 Polished Black Chrome and the correct control material only where the original sheet lists that option. Do not order another finish column or historical revision. Confirm the complete replacement reference before ordering.

*CRIPD016...

*CRIIT162...

*CRI

*CRIMV19820...

*CRIMV12664P...

*CRIPI19819P...

*CRIPD114...

*CRIIT622...

*CRIPD560...

Original manufacturer exploded view follows; its callouts, historical notes and finish qualifications are retained.

ITALY

SCHEDA RICAMBI | SPARE PARTS

SCHEDA RICAMBI | SPARE PARTS SHEET rev.01_02/2025

CRIIT619

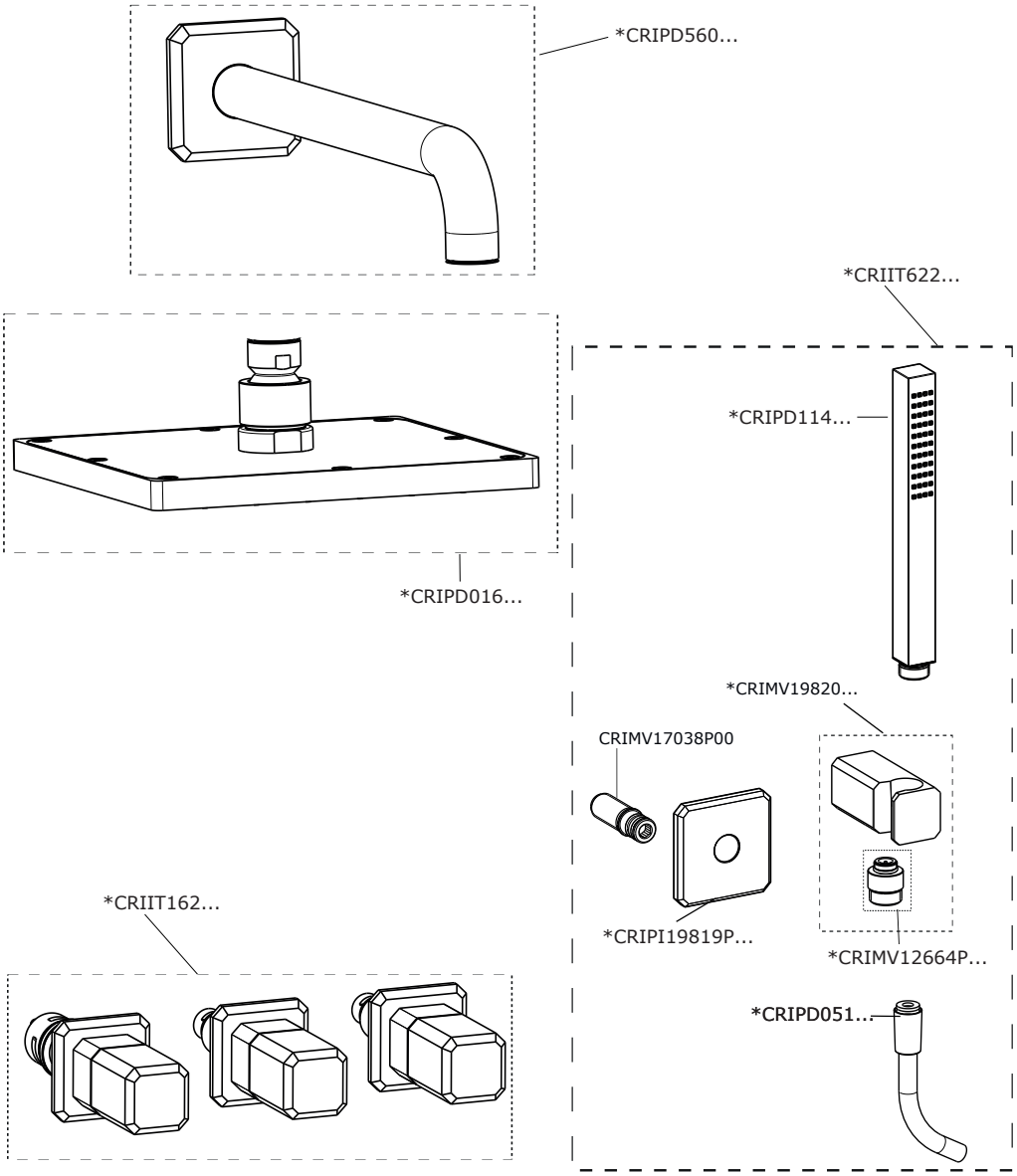

NOTE | NOTES

* completare con codice finitura | complete with finishing code

CRISTINA S.r.l. a socio unico
via G. Fava, 56 - 28024 Gozzano (NO) Italy - phone +39 0322 9545
fax +39 0322 956556 - info@cristinagroup.com
cristinarubinetterie.com

CRISTINA
RUBINETTERIE